Empowering Humans with Robots

RobotPlusPlus Co., Ltd.(ROBOT++)

Hong-An Road 87, Fangshan, Beijing, P.R.China

86 400 015 0909

sales@robotplusplus.com

www.robotplusplus.com

RobotPlusPlus

Empowering Humans with Robots

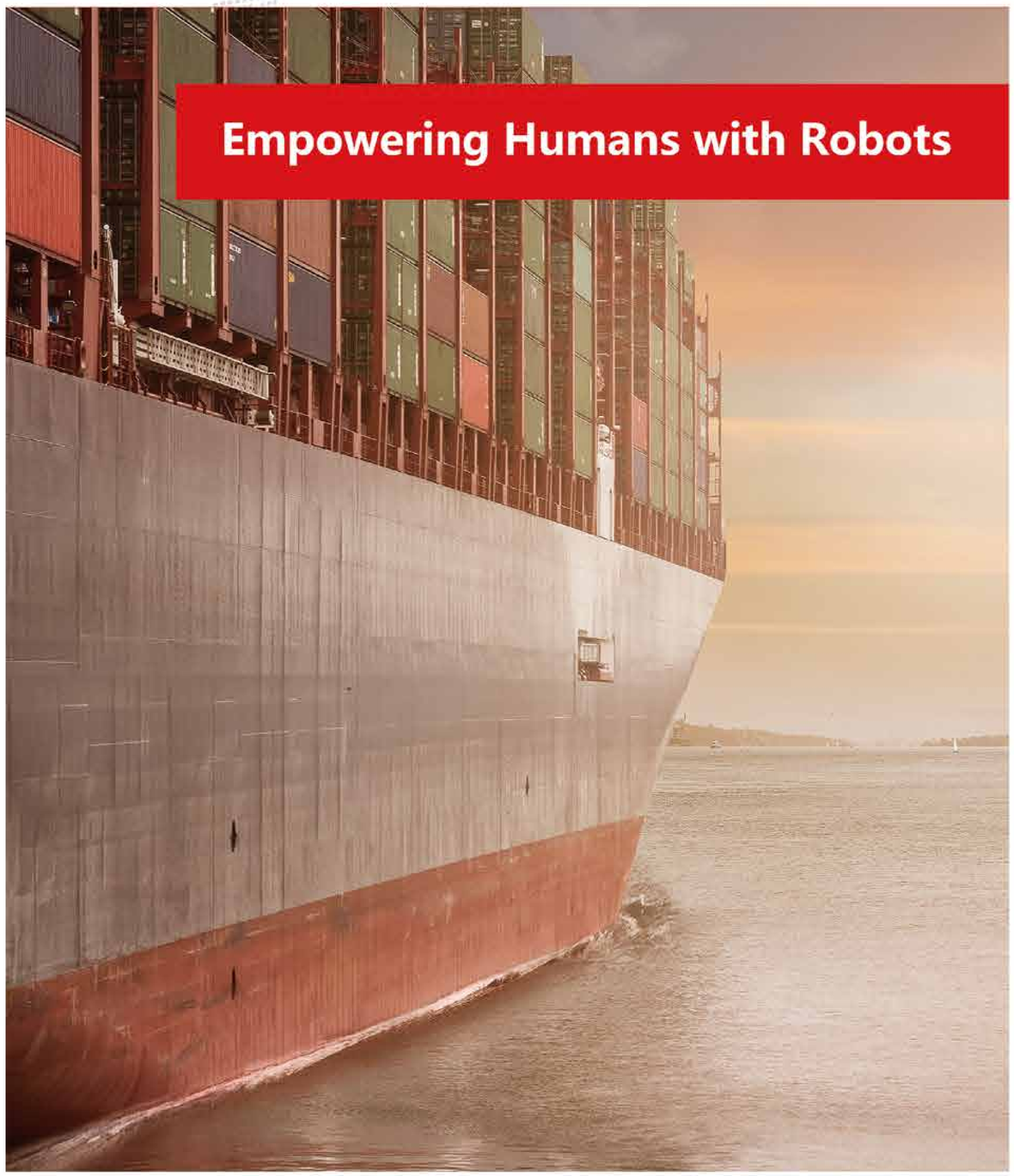

About Us

RobotPlusPlus, founded in 2015, is the first company in China that engaged in the industrialization of working at height robots. Our mission is empowering humans with robots.

We are specialized in delivering environmental-friendly, efficient and economical robots solutions to customers from various fields including marine, energy, industrial and infrastructure.

200+ Employees	**200+** Customers from Various Industries	**2000+** Project Completed
Average **100+** Robots Active Daily	Across **8** Different Fields	**50+** Site Deployed

Technical Advantage

HighMate V40

Efficiency up to 55 m²/h	IP65 Protection Level	99% Water Recovery	WJ1 Surface Preparation

HighMate V40 is a hydroblasting robot used in surface preparation of steel plates. With more than 1,000,000 m² completed, HighMate V40 has proven its safety, stability and efficiency. Strong permanent magnets and maneuverability allows it to cover at least 80% of the surface, regardless if it is straight or curved.

Application Industry

- Ship Repair
- Storange Tank
- Offshore
- Other Heavy Industry

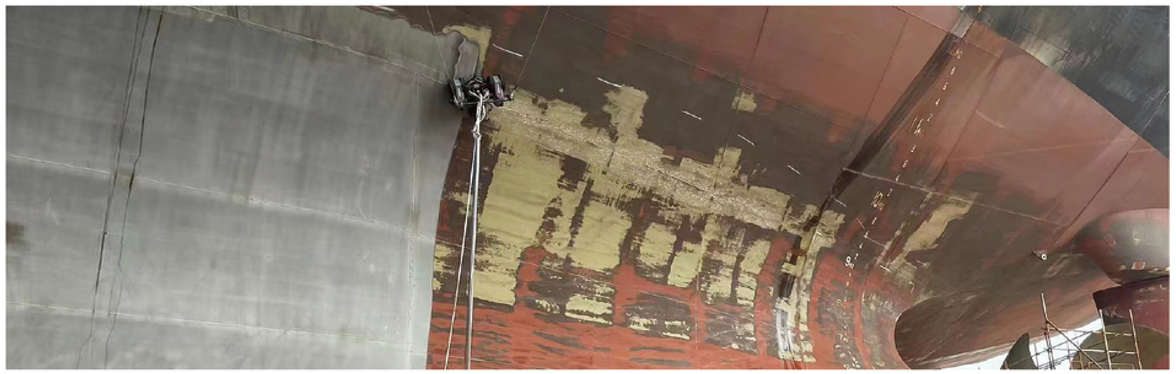

Specifications			
Efficiency	35-55 m²/h	Dimension	810*1154*552 mm
Weight	91 kg	Cleaning Width	300 mm
Pressure	3000 bar	Protection Level	IP65
Flow Rate	18 - 52 L/min	Minimum Curvature Radius	8 m

HighMate V45

Efficiency up to 65 m²/h	20% Efficiency Improved	4 m Minimum Curvature Radius	50% Longer Consumable Lifespan

V45 uses the basis of V40, with operational improvement and an optional hinge system for greater reach. The hinge system allows the robot to have a much better curvature adaptability, which can cover a minimum radius of 4 meters.

Application Industry

- Ship Repair
- Storange Tank
- Offshore
- Other Heavy Industry

Specifications			
Efficiency	45-65 m²/h	Dimension	825*1200*525 mm
Weight	97 kg	Working Width	310 mm
Pressure	3000 bar	Protection Level	IP65
Flow Rate	18 - 52 L/min	Minimum Curvature	4 m

HighMate V40E

Efficiency up to 65 m²/h	20% Efficiency Improved	80% Less Uncovered Area	50% Longer Consumable Lifespan

HighMate V40E is designed for narrow space surface preparation. Together with the V40/V45 it will assist to reach 95% of the area. Front cleaning dome design allows it to reach and operate around edges of dock blocks, spray pipe of tanks and wind girders.

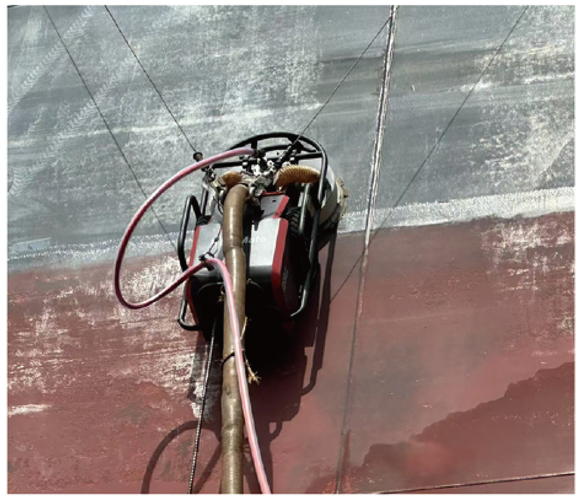

Application Industry

- Ship Repair
- Storange Tank
- Offshore
- Other Heavy Industry

Specifications			
Efficiency	45-65 m²/h	Dimension	1105*575*526 mm
Weight	86 kg	Working Width	310 mm
Pressure	3000 bar	Protection Level	IP65
Flow Rate	18 - 52 L/min	Maximum Load	50 kg

HighMate A10/A20

Efficiency up to 50 m²/h	3 in 1 Fast Change Module	1.4 m Working Width	WJ1/Sa2.5 Surface Preparation

Swing arm robots A10/A20 can use water or abrasive to do surface preparation or pressure wash to meet customers' different demands. The A10 is inter-changeable with the platform of V40, while it can also use V45' s hinge system to achieve the same crossing and curvature management.

Application Industry

- Ship Repair
- Storange Tank
- Offshore
- Other Heavy Industry

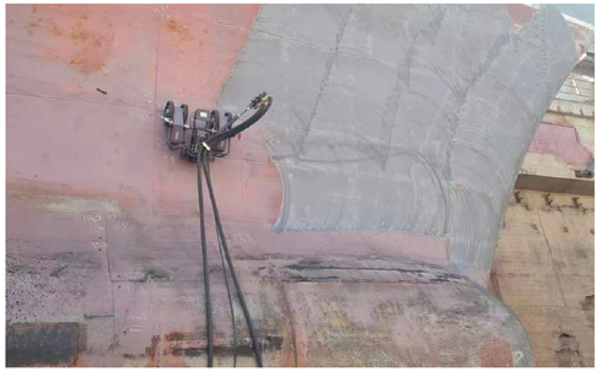

Specifications			
Efficiency	35-55 m²/h	Dimension	740*1018*510 mm
Weight	100 kg	Working Width	300 mm
Pressure	3000 bar	Protection Level	IP65
Flow Rate	30 - 45 L/min	Maximum Load	100 kg

HighMate AP Series

Efficiency up to 500 m²/h	Multi-function Available	Extra Flexibility Design	Automatic Stepping Operation

Swing Arm Robot HighMate AP series is a compact, multi-functional robot capable of performing abrasive blasting, coating, and hydroblasting. Its modular design enables quick and easy tool changes, allowing one operator to replace the open cleaning module with a vacuum dome module in just 20 minutes. The robot' s swing speed and span are adjustable, providing flexibility and efficiency for various applications.

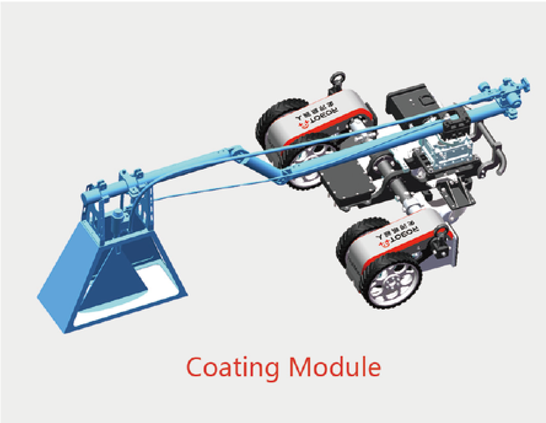
Coating Module

Application Industry

Storange Tank Ship Repair Offshore Other Heavy Industry

Vacuum Abrasive Blasting

Open Hydroblasting / Cleaning

Open Abrasive Blasting

Enclosed Hydroblasting

Specifications			
Efficiency	30-50 m²/h	Dimension	962*750*350 mm
Weight	70 kg	Obstacle Crossing	≤ 18 mm
Min Curvature Radius	5 m (hinge joint version)	Max Speed	10 m/min
Production Rate	Max. 500 m²/h	Control Mode	Manual / Semi-Auto / Auto

HighMate B20

3 Independent Roughening Head	Efficiency up to 180 m²/h	400 mm Effective Working Width	Speed up to 10 m/min

HighMate B20 was developed to reduce the intensity of labor work and reduce health and safety risks with traditional roughening process. It is widely applicable in metal and steel surface roughening processes, helps to finish the job efficiently with no pollution, and hence improves the paint adhesion force and final quality. The smart control system makes it easy to operate as well.

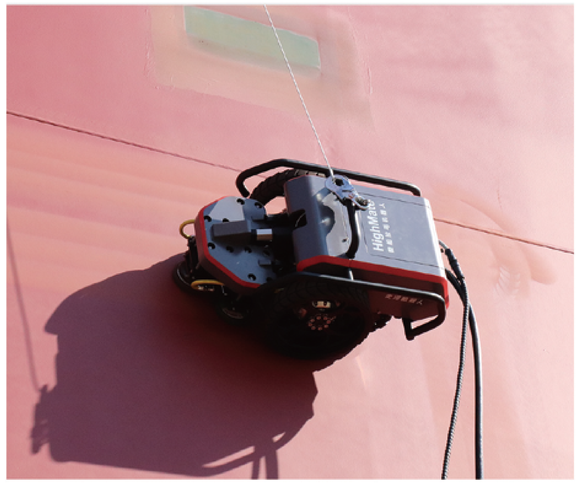

Application Industry

Ship Newbuild Storange Tank Pipeline Other Heavy Industry

Specifications			
Efficiency	150-180 m²/h	Dimension	886*435*426 mm
Weight	59 kg	Working Width	400 mm
Driving Method	400 W motor	Power Supply	220V AC
Speed	10 m/min	Power	3000 W

HighMate B40 U/D

5 kg Abrasive for 4h Continuous Operation	**99%** Dust Recovery	**0.2** m/min Effective Working Speed	Up to **Sa2.5** Surface Preparation

HighMate B40U & B40D are robot pairs using enclosed shot blasting for pipeline industries. The robots are suitable for most curved and cylindrical surfaces, both inner and outer circle circumference, and offer an environment-friendly solution in replacement of sand blasting in many circumstances.

Application Industry

- Wind Turbine
- Pipeline
- Other Heavy Industry

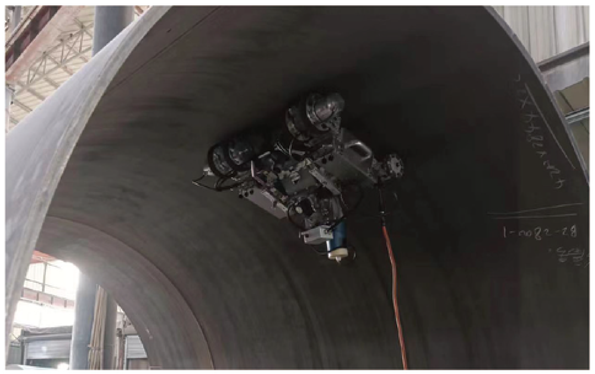

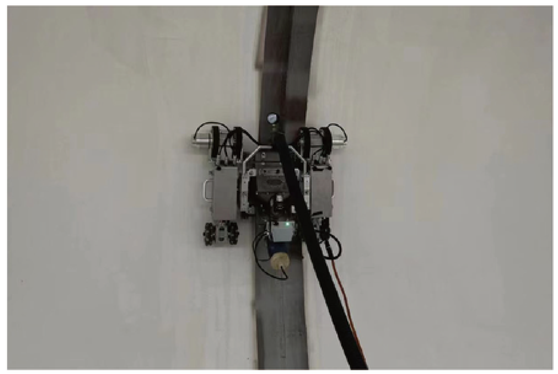

Specifications			
Dimension	770*850*430 mm	Power	3000 W
Weight	80 kg	Minimum Curvature Radius	1.8 m
Speed	12 m/min	Surface Roughness	≥70 μm
Power Supply	220V AC / 50 Hz	Abrasive	CW1.0 Steel Grit

HighMate B50

220 mm Working Width	**HD** Camera Monitoring	**0.7** m/min Effective Working Speed	**5** mm Obstacle Crossing

The polishing robot HighMate B50 is used for polishing and grinding on steel surfaces. B50 uses 3 rollers as its polishing tool, and the mounted HD camera allows the user to monitor the polishing result easily. It can be used in polishing the surface for inspection afterwards, or any surfaces that requires light grinding or polishing.

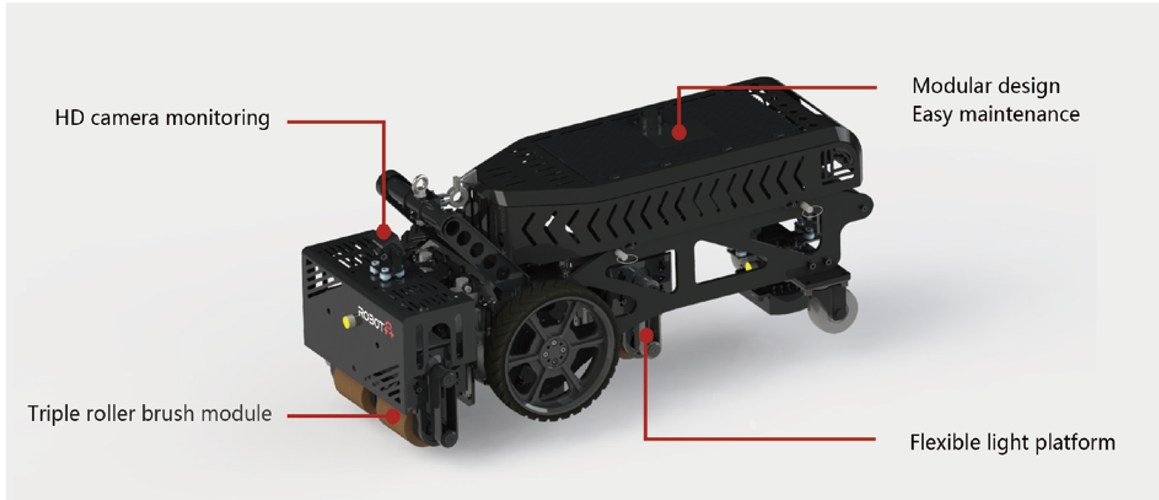

Application Industry

- Spherical tanks
- Pipeline
- Other Heavy Industry

Specifications			
Dimension	720*370*330 mm	Minimum Curvature Radius	1.5 m
Weight	40 kg	Working Width	220 mm
Speed	3.7 m/min	Efficiency	0.3 – 0.7 m/min
Power Supply	220V AC / 50 Hz	Power	3500 W

HighMate Prepper

60 μm	Automatic	Dust-free	500 mm
Surface Roughness	Operation	Operation	Min. Diameter

HighMate Prepper is the robot developed together by RobotPlusPlus and MontiPower, which uses the specialized bristle brush as the blasting tool. It is a perfect replacement of abrasive blasting for spot blasting treatment, for example, small spots on steel surfaces, pipe welding seams, etc. The highly-automated system allows the robot to complete the job with only one press. The bristle blaster only produces very few dust and can be easily collected by a dust collector, which makes it an excellent environment-friendly blasting robot.

Application Industry

Pipeline Other Heavy Industry

Specifications			
Dimension	600*450*450 mm	Minimum Curvature	500 mm
Weight	50 kg	Surface Roughness	≥ 40 μm
Speed	0 – 14 m/min	Control Mode	Manual / Auto

HighMate C20

≥ 110°	Efficiency up to 500 m²/h	580 mm	IP68
Corner Crossing		Working Width	Protection Level

HighMate C20 is designed to tackle the problem in cargo hold cleaning. With the advanced driving control and flexible design, HighMate C20 navigates confined spaces with precision, effectively removing debris, residues, and contaminants while minimizing downtime and labor costs. It helps to eliminate the traditional slow and dangerous manual cleaning and replace with efficient large flow nozzle spray cleaning. With the help of the flexible wheel sets, it is able to cross most corners in the cargo hold area, even reaching areas previously untouched by traditional method.

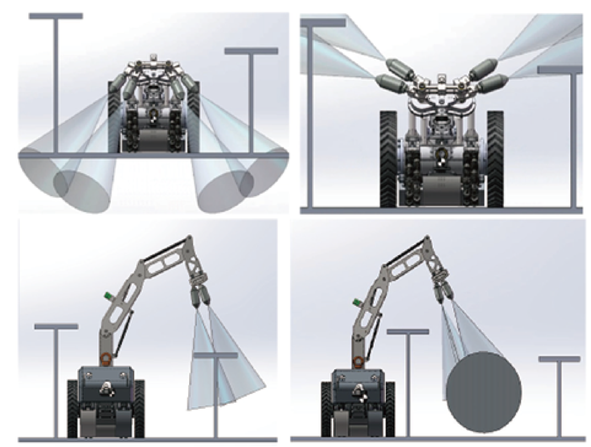

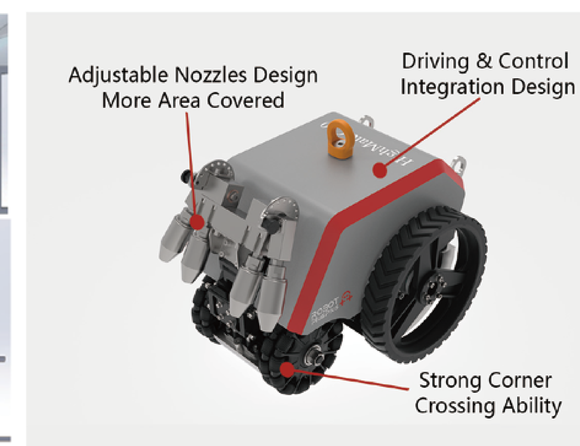

Application Industry

Ship Cleaning Offshore Storange Tank Other Heavy Industry

Specifications			
Dimension	550*434*447 mm	Power	1500 W
Weight	60 kg	No. of Nozzles	4
Speed	28 m/min	Maximum Load	50 kg
Power Supply	220V AC / 50 Hz	Obstacle Crossing	≤ 15 mm
Flow Rate	30 L/min	Maximum Pressure	500 bar

HighMate C30

IP68	360 mm	Up to 360 m²/h	15 mm
Protection Level	Working Width	Efficiency	Obstacle Crossing

The cleaning robot HighMate C30 has the advantage of small size and flexible. A water hose and solvent can be connected for more effective cleaning. It can be used for the cleaning jobs from different industries including ship hulls, storage tank and other large steel surfaces. Furthermore, the integrated control system makes it easy to operate.

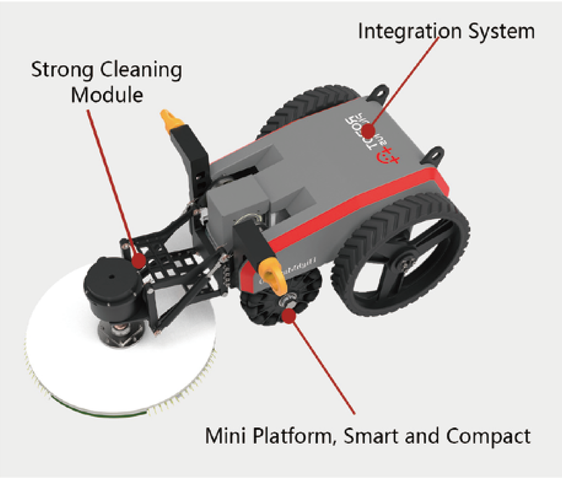

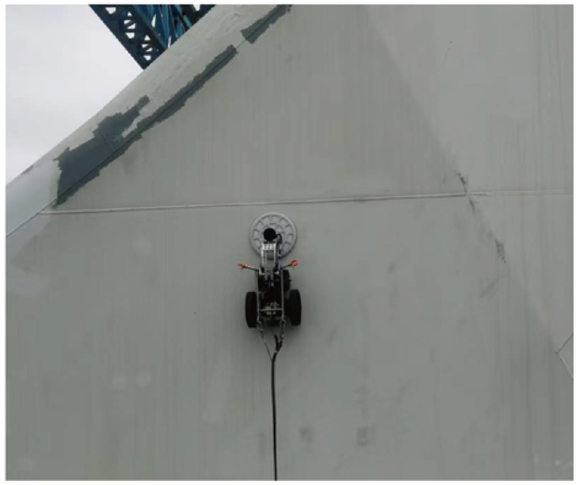

Application Industry

Ship Cleaning Tank Cleaning Other Heavy Industry

Specifications			
Dimension	810*385*385 mm	Power	1000 W
Weight	35 kg	Working Width	360 mm
Speed	10 m/min	Efficiency	150-200 m²/h
Power Supply	220V AC / 50 Hz	Maximum Load	30 kg

The smart magnetic development platforms can be customized according to customers' demand or by themselves. The main difference between the platforms is their load capacity. Customer can adopt the design or execution module they want on the platforms and choose according to the load capacity they want.

HighMate P10

Specifications	
Dimension	445*386*306 mm
Weight	30 kg
Speed	20 m/min
Maximum Load	50 kg
Protection Level	IP68
Power	1000 W

HighMate P20

Specifications	
Dimension	510*412*306 mm
Weight	38 kg
Speed	28 m/min
Maximum Load	50 kg
Protection Level	IP68
Power	1500 W

HighMate P30

Specifications	
Dimension	531*500*540 mm
Weight	45 kg
Speed	10 m/min
Maximum Load	70 kg
Protection Level	IP54
Power	1500 W

HighMate P40

Specifications	
Dimension	810*1154*552 mm
Weight	73 kg
Speed	10 m/min
Maximum Load	150 kg
Protection Level	IP65
Power	1800 W

Integration Solution Diagram

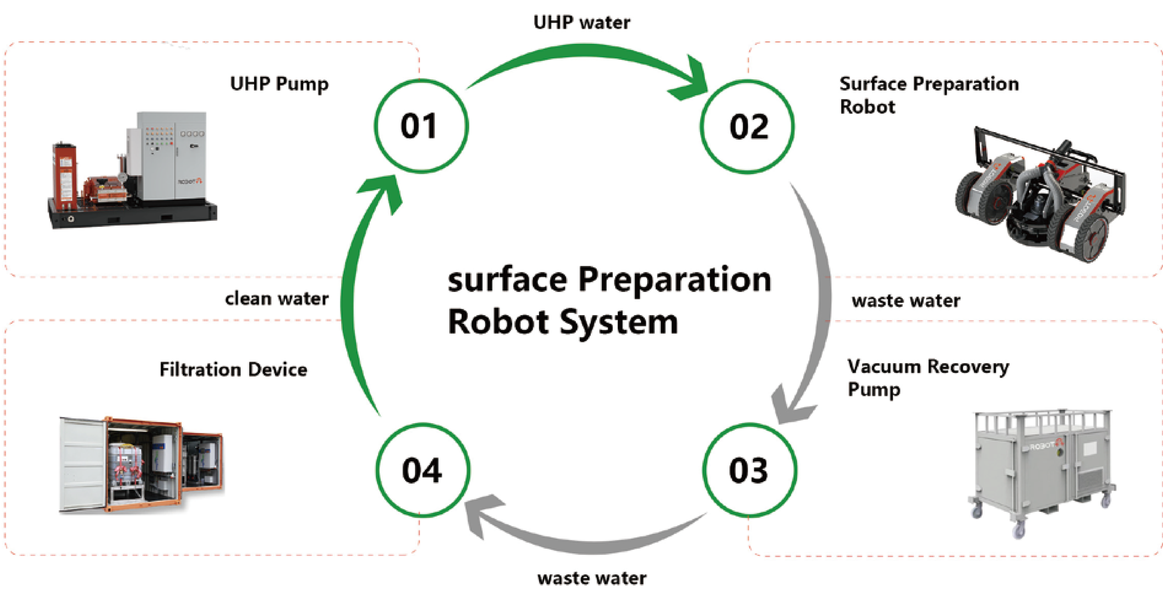

Container Solution Diagram and Introduction

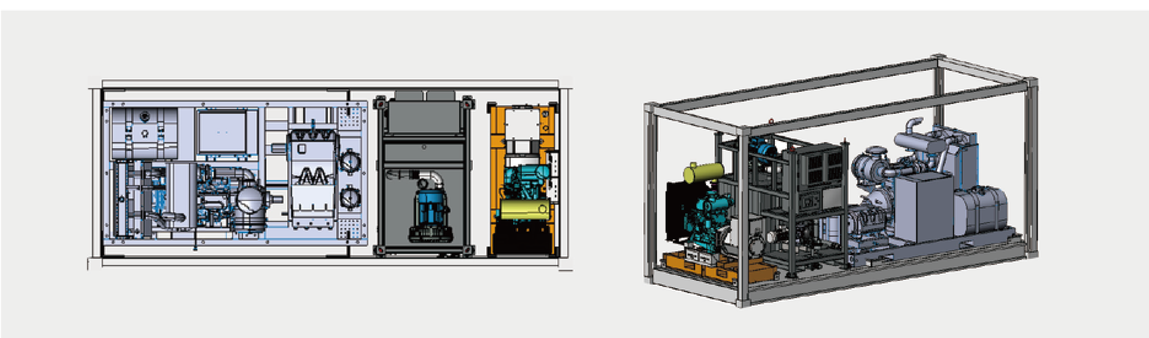

In order to provide our customer with a full solution, RobotPlusPlus has developed a container integrated solution. An integration solution includes one generator, one UHP pump, one vacuum recovery pump and one robot set. They are integrated in one container, and one control panel is able to control all the devices through this solution. An optional supplementary 10 feet container includes an extra waste tank and a working table for the worker to do on-site maintenance and repair.

UHP Pump

Specifications			
Dimension	3200*1800*2200 mm	Engine Speed	1900 rpm
Maximum Pressure	2800 bar	Weight	5500 kg
Power	294-333 kW	Flow Rate	50 L/min

Recovery Pump

Specifications			
Dimension	2400*1200*1800 mm	Power Supply	380V AC
Maximum Flow Rate	46.7 L/min	Weight	1800 kg

Filtration Device

Specifications			
Dimension	3850*2200*2670 mm	Weight	3000 kg
Maximum Treatment Rate	160 L/min	Power	30 kW
Flocculant	PAM / PAC		

HighMate Manual

Specifications			
Dimension	1720*650*1040 mm	Surface Preparation	Wa2.5 / WJ2.0
Weight	65 kg	Working Width	305 mm
Maximum Pressure	3000 bar	Maximum Flow Rate	52 L/min

Self-Developed Rotary

Specifications			
Maximum Pressure	3000 bar	Rotation	3200 rpm
Flow Rate	52 L/min	Protection Level	IP66
Dimension	φ94 × 203 mm		

Self-Developed Spray Lance

Specifications			
Dimension	345*47*57 mm	No. of Nozzles	16
Weight	3.7 kg	Working Width	310 mm
Inlet Thread	3-8/24UNF / M10*1.25		

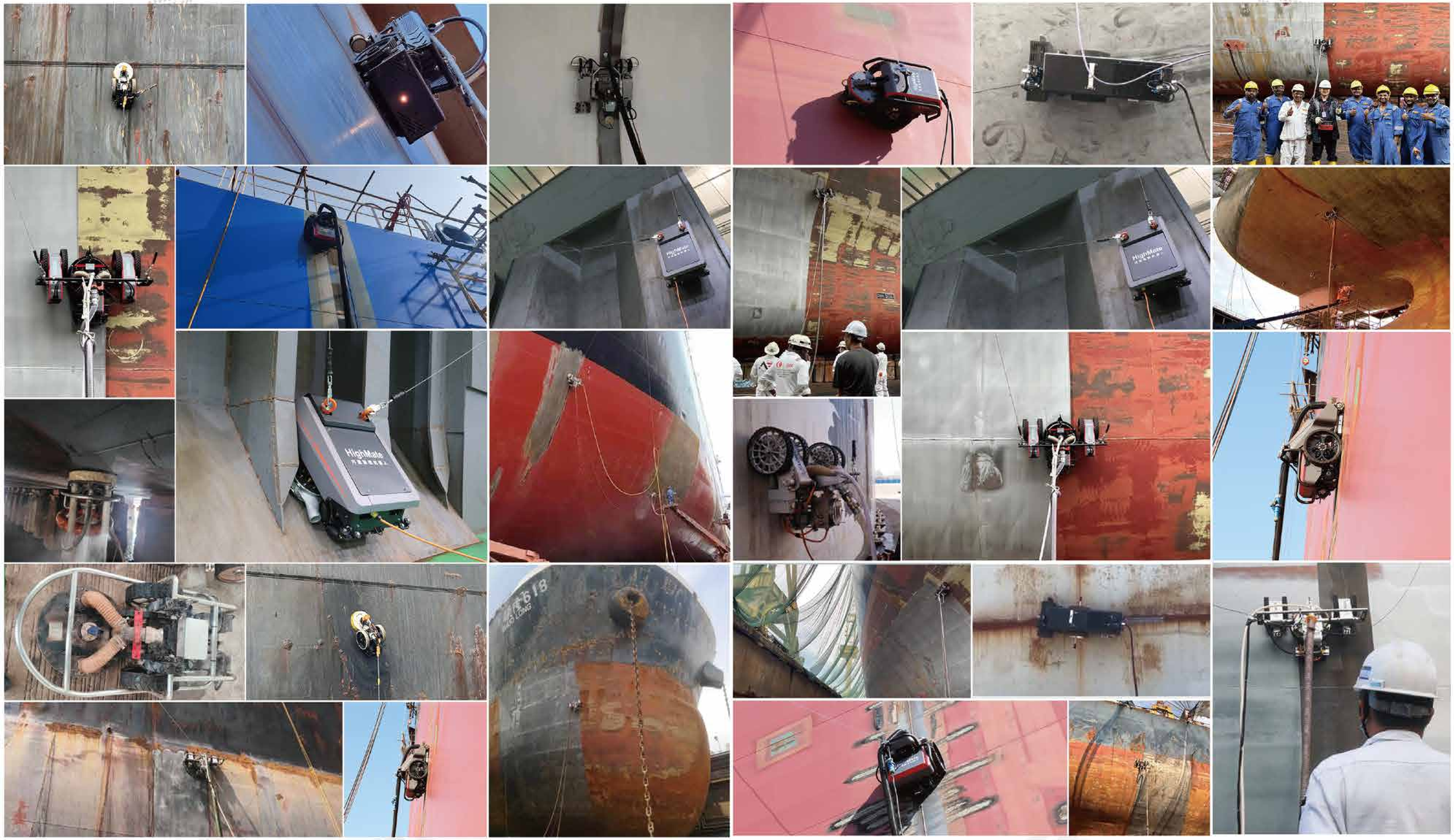
HighMate